Modulating linear actuator with emergency function for 2-way and 3-way globe valves

- **Actuating force 800 N**
- **Nominal voltage AC/DC 24 V**
- **Modulating control DC 0 ... 10 V**
- **Position feedback DC 2 ... 10 V**
- **NVF24-MFT(-T) pulling**
  NVF24-MFT-E(-T) pushing
- **NVF24-MFT(-E) with cable connection**
  NVF24-MFT(-E)-T with terminal connection
- **Brackets and adapter sets for third-party valves as accessories (UNV-..)**

Technical data

Electrical data	Nominal voltage	AC 24 V, 50/60 Hz / DC 24 V
	Nominal voltage range	AC 19.2 ... 28.8 V / DC 21.6 ... 28.8 V
	Power consumption Operation For wire sizing	5.5 W @ nominal force 10 VA
	Connection NVF24-MFT(-E) NVF24-MFT(-E)-T	Cable 1 m, 5 x 0.75 mm^2 Terminal connection
	Parallel operation	Yes (note performance data for supply!)
Functional data	Actuating force	800 N
	Control Control signal Y Operating range	DC 0 … 10 V, input impedance 100 kΩ DC 2 … 10 V
	Position feedback (measuring voltage U)	DC 2 … 10 V, max. 0.5 mA
	Position accuracy	±5%
	Manual override	With hexagon socket screw key, temporary
	Nominal stroke	20 mm
	Running time Motor Spring return	150 s 30 s
	Emergency actuating time	<1,5 s/mm
	Sound power level Motor Spring return	≤35 dB (A) ≤50 dB (A)
	Position indication	mechanical 10 … 20 mm stroke
Safety	Protection class	**III** Safety extra-low voltage
	Degree of protection	IP54
	EMC	CE according to 2004/108/EC
	Software Class	A (EN 60730-1)
	Mode of operation	Type 1 (EN 60730-1)
	Rated impulse voltage	0.33 kV (EN 60730-1)
	Control pollution degree	3 (EN 60730-1)
	Ambient temperature	0 ... +50°C
	Non-operating temperature	–40 ... +80°C
	Ambient humidity	95% r.h., non-condensating (EN 60730-1)
	Maintenance	Maintenance-free
Dimensions / Weight	Dimensions	See «Dimensions» on page 5
	Weight	approx. 1.5 kg with bracket UNV-002 (without valve)

Safety notes

- **The actuator has been designed for use in stationary heating, ventilation and air conditioning systems and is not allowed to be used outside the specified field of application, especially in aircraft or in any other airborne means of transport.**
- **It may only be installed by suitably trained personnel. Any legal regulations or regulations issued by authorities must be observed during assembly.**
- **The device does not contain any parts that can be replaced or repaired by the user.**
- **The device contains electrical and electronic components and is not allowed to be disposed of as household refuse. All locally valid regulations and requirements must be observed.**

Product features

Mode of operation
The actuator is activated with a standard modulating signal DC 0 ... 10 V. When the actuator is deenergized, the actuator spindle of the NVF.. type retracts and that of the NVF..-E type extends.

Parameterisation
Control signal, operating range, feedback, running time and other functions can be adjusted with PC-Tool.

Installation on Belimo valves
If a combination of actuator and BELIMO globe valve is ordered, then one **UNV-002** bracket is included in the scope of delivery.

If an actuator is ordered without Belimo globe valve, then the **UNV-002** bracket (see «Accessories») must also be ordered.

Installation on third-party valves
Prior to installation on a third-party valve, a suitable bracket **UNV-..** (see «Accessories») must first be screwed to the actuator. The adapter set integrated therein is comprised of a valve neck adapter and a valve stem adapter. The valve neck adapter, together with the clamping strap on the bracket, makes possible simple attachment on the neck of the valve. The valve stem adapter is mounted on the valve stem. The linear spindle can be coupled semi-automatically to the valve stem with the valve stem coupling.
The actuator can be rotated by 360° ◁ on the valve neck.

Retrofit actuators **NVF.. -R** are also available which are equipped with a Retrofit bracket and which can be used with corresponding **ZNV-**.. (adapter set) for valves from a wide array of manufacturers.

Manual override
The stroke can be adjusted in a voltage-free state by using a hexagon socket screw key (5 mm), which is plugged into the actuator at the top. If the hexagon socket screw key is turned in a clockwise direction, then the actuator spindle will extend from the actuator housing (pushing) and maintain the position until a nominal voltage is applied (the controller has first priority).

Functional reliability
The actuator is protected against short circuits, polarity reversal and overloading.

Position indication
The stroke is indicated mechanically on the bracket. The stroke range adjusts itself automatically.

Combination valve/actuator
Refer to the valve documentation for suitable valves, their permitted media temperatures and closing pressures.

Accessories

	Description	
Mechanical accessories	Brackets and adapter sets UNV-..	see www.belimo.eu/retrofit

Electrical installation

Wiring diagram

Notes
- Connect via safety isolation transformer.
- Parallel connection of other actuators possible. Note performance data for supply.

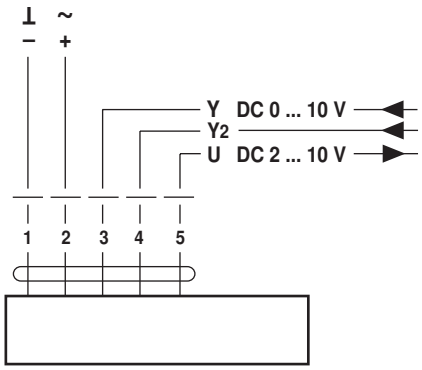

Cable colours:
1 = black
2 = red
3 = white
4 = white
5 = white

Functions

Alignment of the operating elements

The terminals for the cable connection, the operating elements S1, S2, S3 and the H1 LED indicator are located under the cover of the actuator.
By setting slide switch S3 or pressing pushbuttons S1 and S2, it is possible to configure the actuator very simply on site to suit actual requirements.
S3.1 Direction of stroke
S3.2 Valve closing point

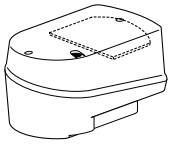

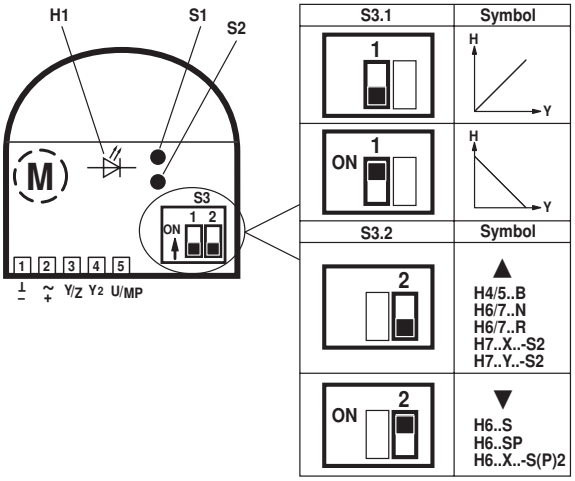

Functional description

Function	Description	Switch		
Test	The valve effects full stroke with maximum running time and checks the adapted stroke to determine whether the two end-points (H=0% and H=100%) are reached.	Press S1		
Init (Adaption)	The possible stroke effected (between the two mechanical end stops of the valve) is detected a 100% stroke and stored in the microcontroller. The control signal and the running time are then matched to this 100% stroke.	Press S2		
Direction of stroke	Direction of stroke relative to the control signal	S3.1	**Symbol**	**Consequence**
direct [1]	0% control signal corresponds to 0% position feedback. (The actuator spindle is retracted or extended according to the selected closing point.)	OFF	H Y	U Y
inverted	0% control signal corresponds to 100% position feedback. (The actuator spindle is extended or retracted according to the selected closing point.)	ON	H Y	U Y
Valve closing point	Closing point with actuator spindle retracted or extended.	S3.2	**Symbol**	**Consequence**
up [2]	The actuator spindle is retracted into the actuator and the valve stem is extended from the fitting. The position feedback indicates 0% if the stroke direction is «direct».	OFF	▲	Y1
down [3]	The actuator spindle is extended from the actuator and the valve stem is retracted into the fitting. The position feedback indicates 0% if the stroke direction is «direct».	ON	▼	Y1

[1] Factory setting
[2] Standard setting for valves H4..B, H5..B, H6..N, H6..R, H7..N, H7..R, H7..X..-S2 and H7..Y..-S2
[3] Standard setting for valves H6..S, H6..SP and H6..X..-S(P)2

LED display H1

The LED display is two-coloured (red/green) and shows the current status of the actuator.

Green steady light	Actuator working properly	
Green flashing light	Test run or adaptation with synchronisation in progress	
Red steady light	A fault is present	Possible causes of malfunctions: – Actuator installed incorrectly – Valve stem blocked – No valve installed The adaptation must be repeated by pressing pushbutton S2 after the malfunction has been eliminated.
Red flashing light	After every voltage interruption (>2 s). The valve is automatically synchronized at the selected closing point the next time it closes, and the LED indicator changes from a red flashing light to a green steady light.	
Alternating red/green flashing light	Addressing via the control system and operation of the adaptation pushbutton S2 in progress	

Functions *(Continued)*

Modulating control

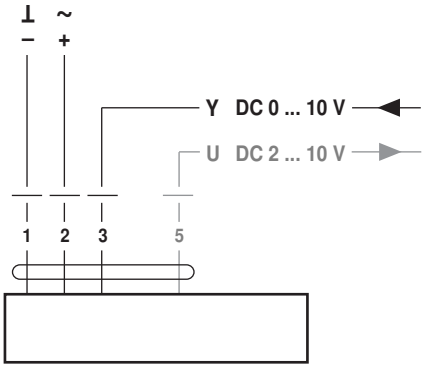

Symbols: Direction of stroke	Symbols: Closing point Valve	Signal direct	Signal inverted	Closing point up	Closing point down	Control signal min. (e.g. Y = 2 V)	Control signal max. (e.g. Y = 10 V)	Measuring signal min. (e.g. U = 2 V)	Measuring signal max. (e.g. U = 10 V)	Actuator spindle moves	
		S3.1		S3.2							
H, Y	▲	OFF		OFF		X		X		ON	
							X		X		OFF
	▼	OFF			ON	X		X			OFF
							X		X	ON	
H, Y	▲		ON 1)	OFF		X			X		OFF
							X	X		ON	
	▼		ON 1)		ON	X			X	ON	
							X	X			OFF

1) If the controller generates a negative signal (<0.15 V), slide switch S3.1 must not be set to «ON», if the operating range of the actuator is set to 2 … 10 V (Exception: start point in the parameterized operating range of 0.5 V).

3-point control

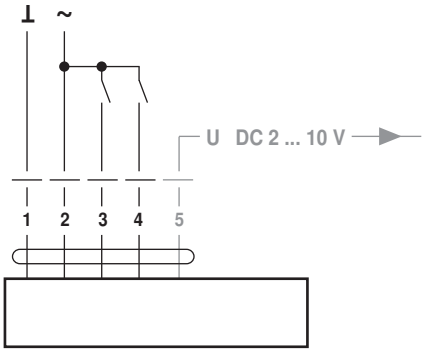

Note
Only works with a nominal voltage of **AC 24 V !**

The linear actuator must be accordingly parameterized and equipped with a 3-wire connector for 4-point applications.

Symbols: Direction of stroke	Symbols: Closing point Valve	Signal direct	Signal inverted	Closing point up	Closing point down	Relay contact (Y1)	Relay contact (Y2)	Measuring signal min. (e.g. U = 2 V)	Measuring signal max. (e.g. U = 10 V)	Actuator spindle moves	
		S3.1		S3.2		0	0	1)	1)	stops	stops
H+, Y2, Y1, H-	▲	OFF		OFF		1	0		X 2)		OFF
						0	1	X 2)		ON	
	▼	OFF			ON	1	0		X 2)	ON	
						0	1	X 2)			OFF
H+, Y2, Y1, H-	▲		ON	OFF		1	0		X 2)	ON	
						0	1	X 2)			OFF
	▼		ON		ON	1	0		X 2)		OFF
						0	1	X 2)		ON	

1) Measuring signal U according to position
2) If relay contact a or b is in switch position 1 for longer than the running time (150 s)

Override control 100%

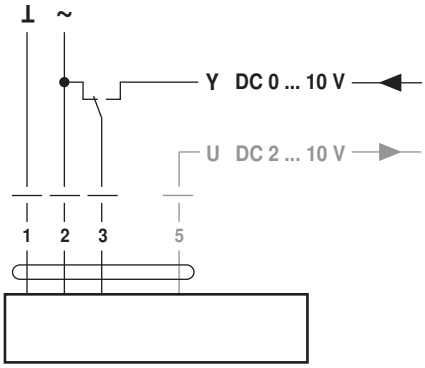

A typical use for 100% override control is in a frost protection circuit. Whether or not the frost thermostat has to interrupt the signal conductor to the controller «d» depends on the make of controller being used (not necessary, if the signal output at the controller is short circuit proof and protected against polarity reversal).

Symbols: Direction of stroke	Symbols: Closing point Valve	Signal direct	Signal inverted	Closing point up	Closing point down	Control signal min. (e.g. Y = 2 V)	Control signal max. (e.g. Y = 10 V)	Measuring signal min. (e.g. U = 2 V)	Measuring signal max. (e.g. U = 10 V)	Actuator spindle moves	
		S3.1		S3.2							
H, Y	▲	OFF		OFF		1	0		X		OFF
			ON			1	0	X		ON	
	▼	OFF			ON	1	0		X	ON	
			ON			1	0	X			OFF

Functions

(Continued)

Emergency control function

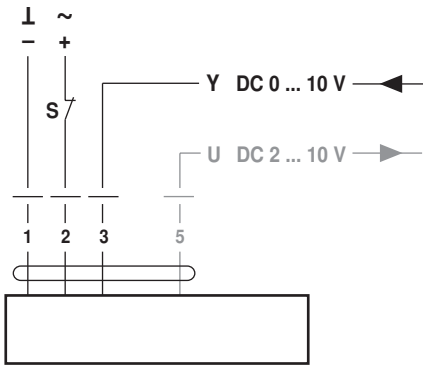

The actuator spindle moves to the end stop if the power supply is interrupted. In the case of the NVF.. type, the actuator spindle retracts into the actuator housing (pulling). In the case of the NVF..-E type, the actuator spindle extends from the actuator housing (pushing). The valve has either an NO (open when deenergized) or NC (closed when deenergized) function depending on its design (closing point up or down).

Symbols									Actuator spindel moves	
Direction of stroke	Closing point Valve	Signal direct	Signal inverted	Closing point up	Closing point down	Relay contact s	Measuring signal min. (e.g. U = 2 V)	Measuring signal max. (e.g. U = 10 V)	CCW	CW
		S3.1		S3.2					NVF24-MFT	NVF24-MFT-E
	1)	1)		1)		0	2)	2)	ON	
	1)	1)		1)		0	2)	2)		OFF

1) The position of the slide switch has no influence on the emergency control direction
2) No measuring voltages can be determined in the deenergized state

Dimensions [mm]

Dimensional drawings

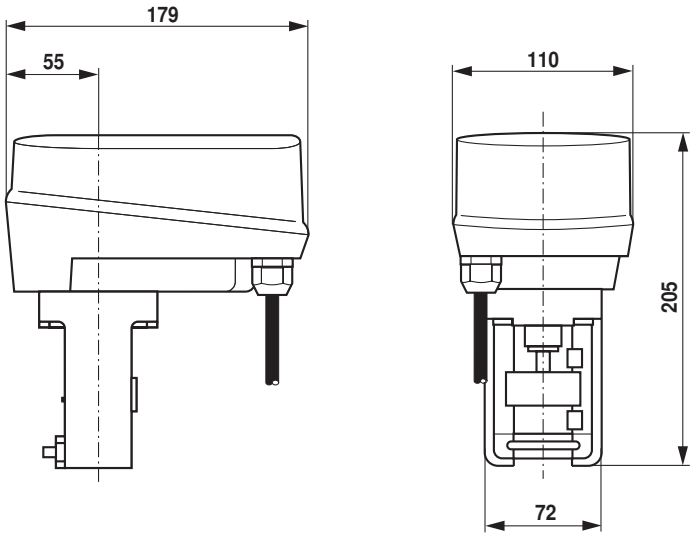

Further documentation

- Overview of brackets and adapter sets on www.belimo.eu/retrofit
- Complete overview «The complete product range of water solutions»
- Data sheets for globe valves
- Installation instructions for actuators and/or globe valves, respectively
- Notes for project planning (hydraulic characteristic curves and circuits, installation regulations, commissioning, maintenance, etc.)
- Specification texts

BELIMO

NVF(Y)24-MFT..(-E)(-T)

NVF24-MFT(-E)-R

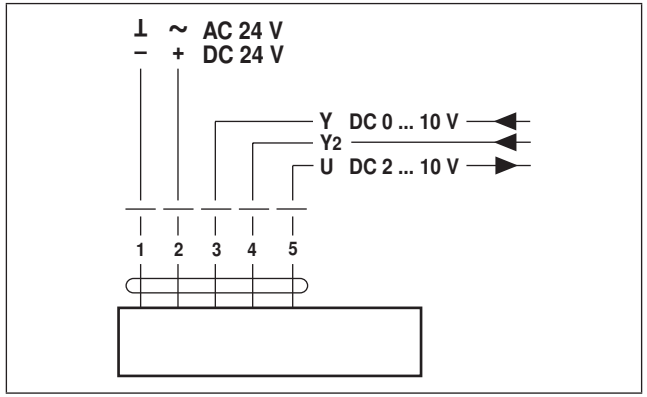

70448.D

CE

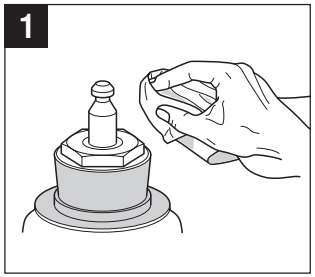

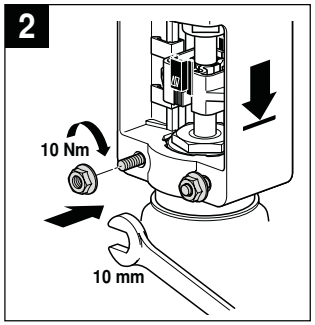
10 Nm
10 mm

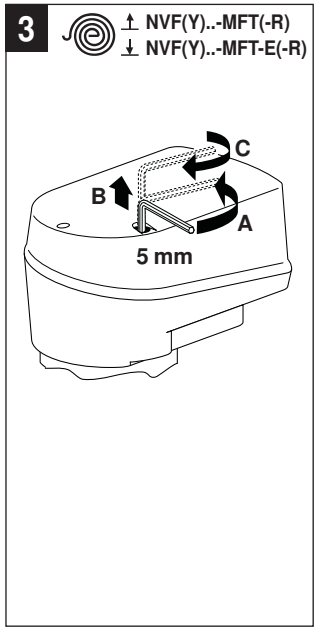
NVF(Y)..-MFT(-R)
NVF(Y)..-MFT-E(-R)
C
B
A
5 mm

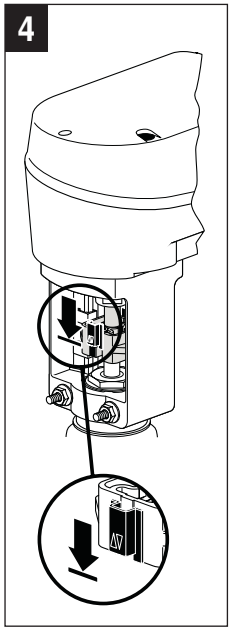

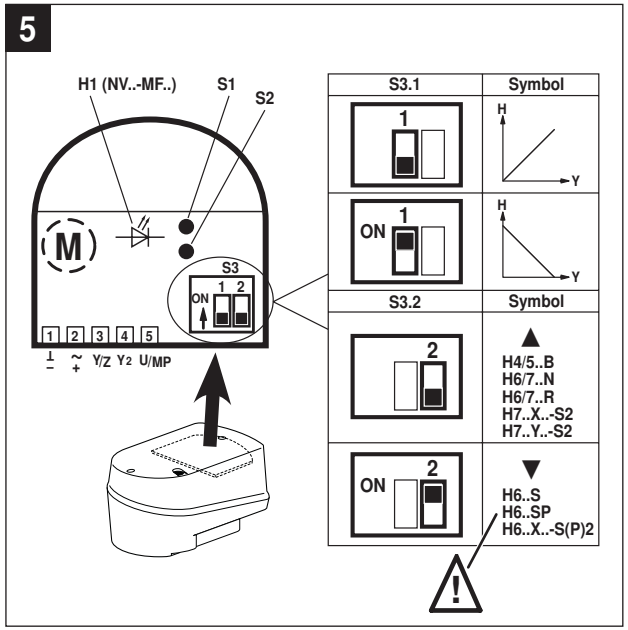
H1 (NV..-MF..)
S1
S2
S3
ON
1 2
1 2 3 4 5
Y/Z Y2 U/MP
S3.1
Symbol
1
ON 1
H
Y
S3.2
Symbol
2
ON 2
H4/5..B
H6/7..N
H6/7..R
H7..X..-S2
H7..Y..-S2
H6..S
H6..SP
H6..X..-S(P)2

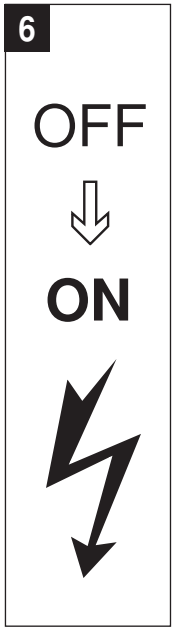
OFF
ON

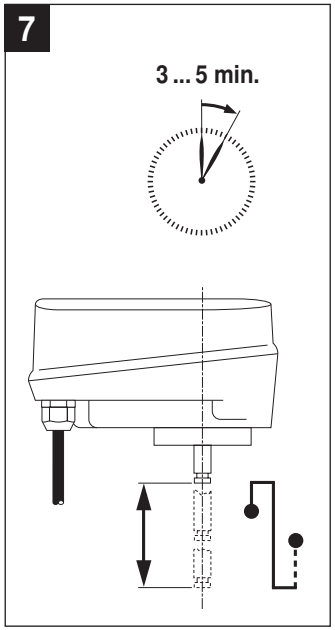
3 ... 5 min.

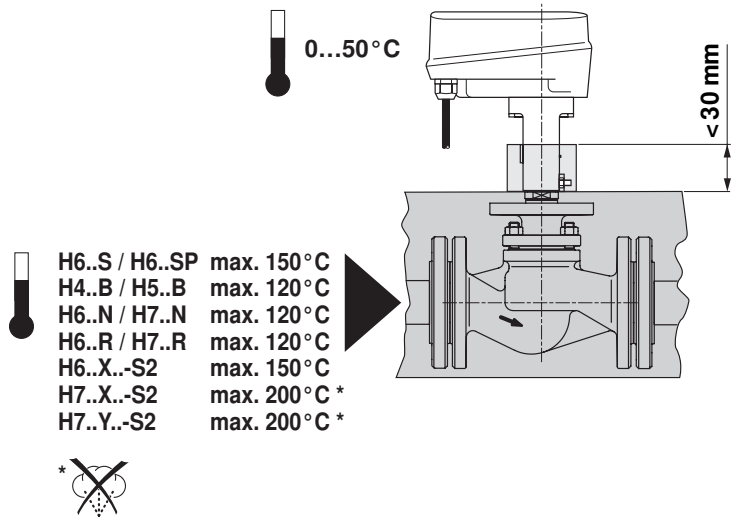
0…50°C
< 30 mm
H6..S / H6..SP max. 150°C
H4..B / H5..B max. 120°C
H6..N / H7..N max. 120°C
H6..R / H7..R max. 120°C
H6..X..-S2 max. 150°C
H7..X..-S2 max. 200°C *
H7..Y..-S2 max. 200°C *
*

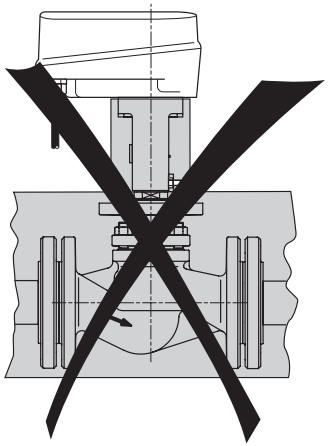

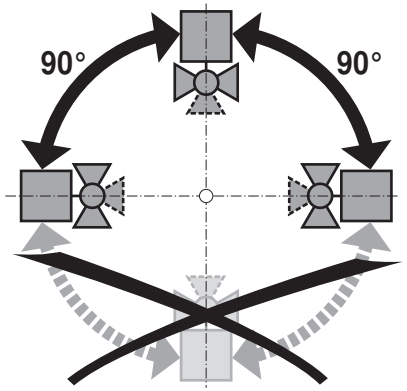
90°
90°